Real-Time RFI Mitigation for Single-Dish Radio Telescopes

Richard Prestage, GBO

GREEN BANK OBSERVATORY

Collaborators

- Cedric Viou, Jessica Masson
  - Station de radioastronomie de Nançay
    Observatoire de Paris, PSL Research University, CNRS, Université d'Orléans
- Nick Joslyn, Emily Ramey – GBO REU Students
- Tim Blattner – NIST
- Michael Lam - West Virginia University
- Luke Hawkins, Jason Ray, Mark Whitehead - GBO

GREEN BANK OBSERVATORY

NSF Associated Universities Inc.

Talk Outline

- Motivation and science goals
- Approach
- Time and frequency domain blanking
- Implementation and initial test results
- Next steps

GREEN BANK OBSERVATORY

NSF Associated Universities Inc.

MOTIVATION

- Problems caused by RFI continue to grow:
  - Increasing occupancy of RFI
  - Wider bandwidth observations
  - Ever increasing data rates
  - More sensitive telescopes
- Current approaches are becoming unsustainable
- Single dishes are more susceptible than Interferometers
- Despite all of these reasons, GBT observations continue to rely on offline, semi-interactive RFI mitigation approaches
- Goal is to provide a complete implementation for the GBT VEGAS spectrometer / pulsar backend, which may then also be used in other similar instrumentation

GREEN BANK OBSERVATORY

NSF Associated Universities Inc.

Approach

- Develop real-time identification and mitigation algorithms which can be implemented in the heterogenous FPGA / CPU / GPU VEGAS DSP pipeline
- Previous GBT work has raised skepticism about “black-box” implementations, and concerns about unknown impacts on data quality
- Prototype and rigorously qualify approach using archival raw voltage data
- Work closely with domain experts to ensure validity of approach at the level of improved astrophysical results, not just “nicer looking spectra”

GREEN BANK OBSERVATORY

NSF Associated Universities Inc.

Science Target I: Pulsar Timing

- Science Goals
  - Detection of gravitational waves via pulsar timing arrays
  - Precision tests of general relativity
  - Constraining neutron star equations-of-state

- Observing Mode: coherent dedispersion and real-time folding
  - RFI mitigation performed offline, on ~ 10 second accumulations

- Lam et al. 2016:
  - Template fitting errors dominate TOA precision for many [NANOGrav] pulsars for many epochs [so increasing effective bandwidth worthwhile]
  - Errors … introduced from unremoved RFI will produce extra variance on short timescales

GREEN BANK OBSERVATORY

NSF Associated Universities Inc.

Science Target II: HI emission in gravitationally lensed galaxies

- Star formation rate has plummeted in last ~ 8 Gyr
- HI content of galaxies (via DLA) constant since z ~ 2
- Statistical measurements of the cosmological HI mass density (stacking, intensity mapping) consistent with DLA results
- BUT: these approaches cannot study HI content of individual galaxies

- Arecibo: z ~0.25 (Catinella et al. 2008)
- CHILES with VLA: z ~ 0.5
- GBT + lensed gals: z ~ 0.7-0.8

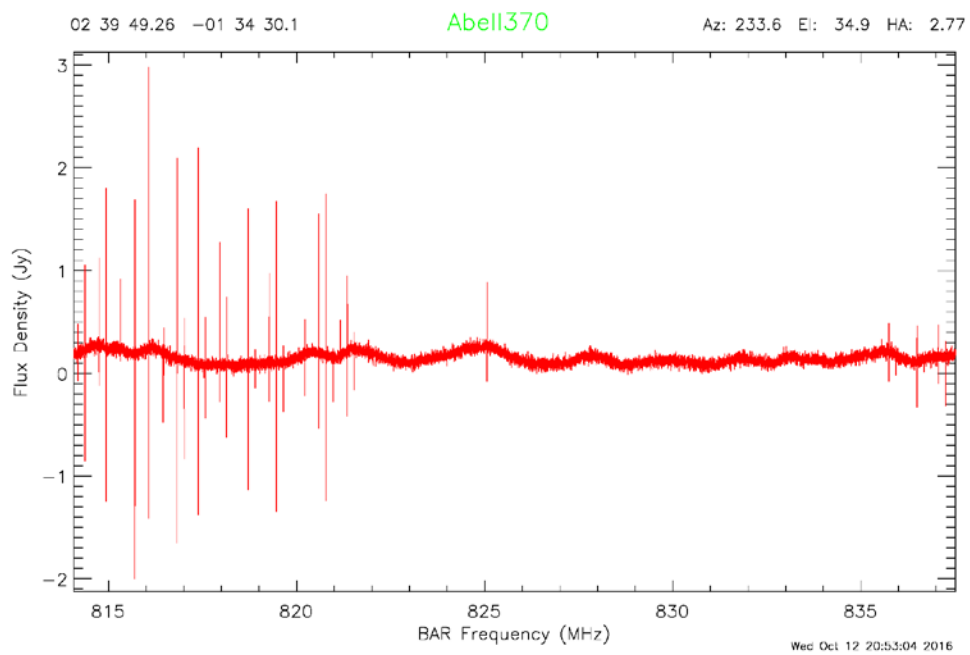

Test Data

- L-band observations of pulsar J1713+0747, obtained as part of a NANOGrav global timing campaign
- GUPPI "raw" complex voltage data – 200 MHz BW, 32 coarse channels
  - 6.25MHz bandwidth, 0.16 μs time resolution
- Multiple radar and tone signals
- ARSR-3 FAA Air Surveillance Radar at 1256 and 1292 MHz
  - 2 μs pulse with an average repetition rate of 341 pps
  - sweep rate of 5 rpm (12 second rotation period)
  - Normally suppressed by an RF notch filter between 1.2 and 1.34 GHz (i.e. 140 MHz of lost bandwidth)

Example spectrogram

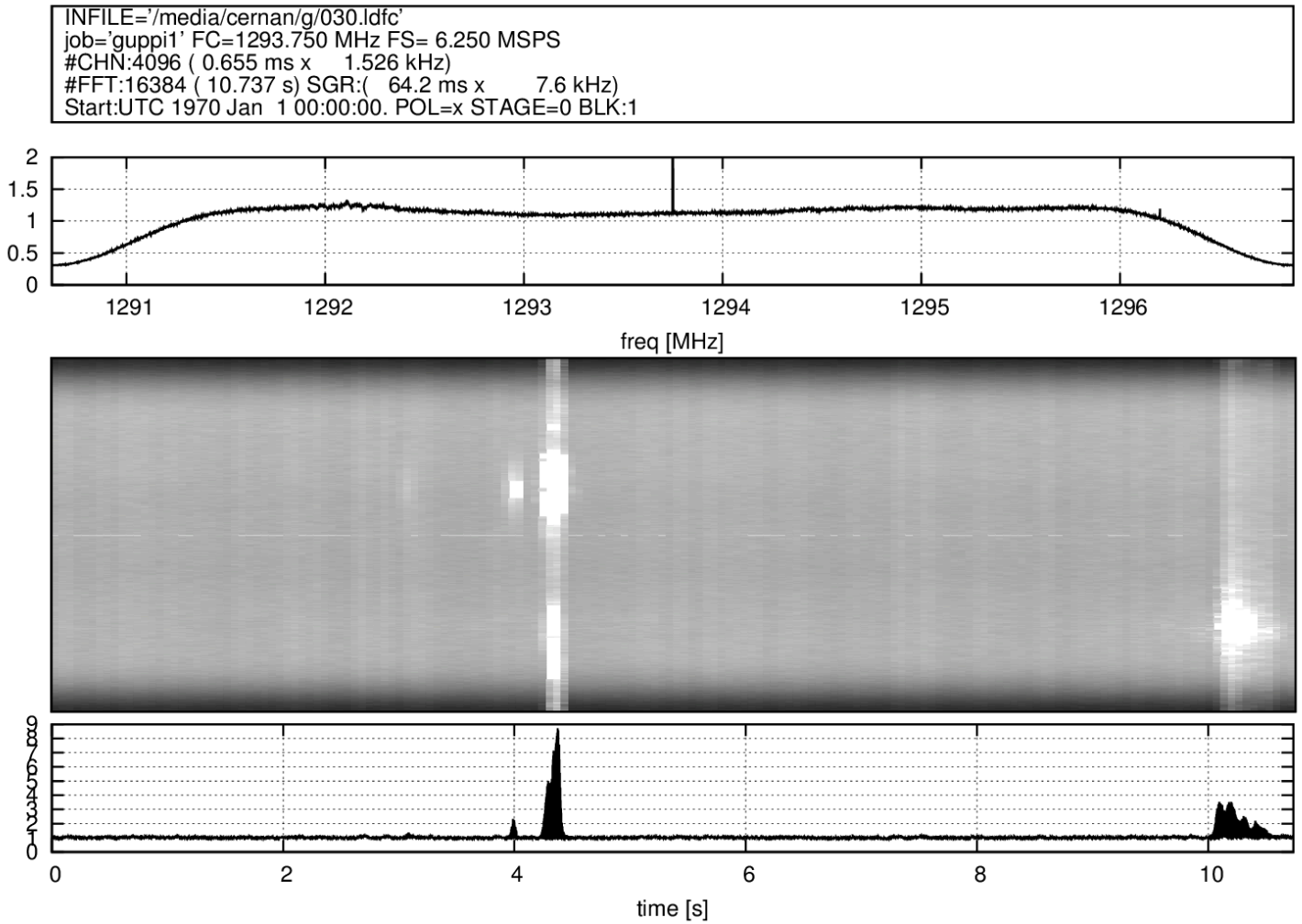

GREEN BANK OBSERVATORY

Example spectrogram

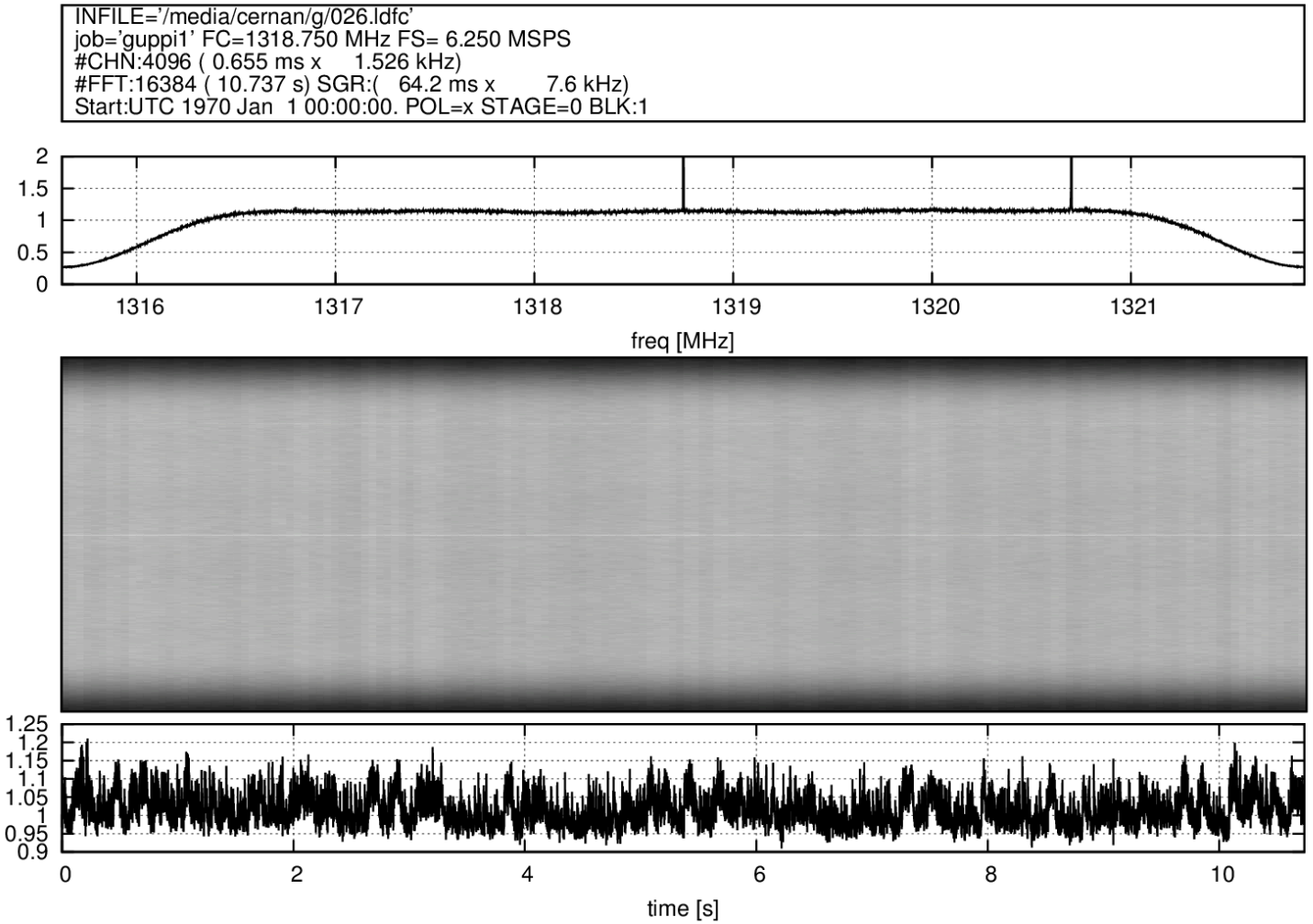

GREEN BANK OBSERVATORY

Example spectrogram

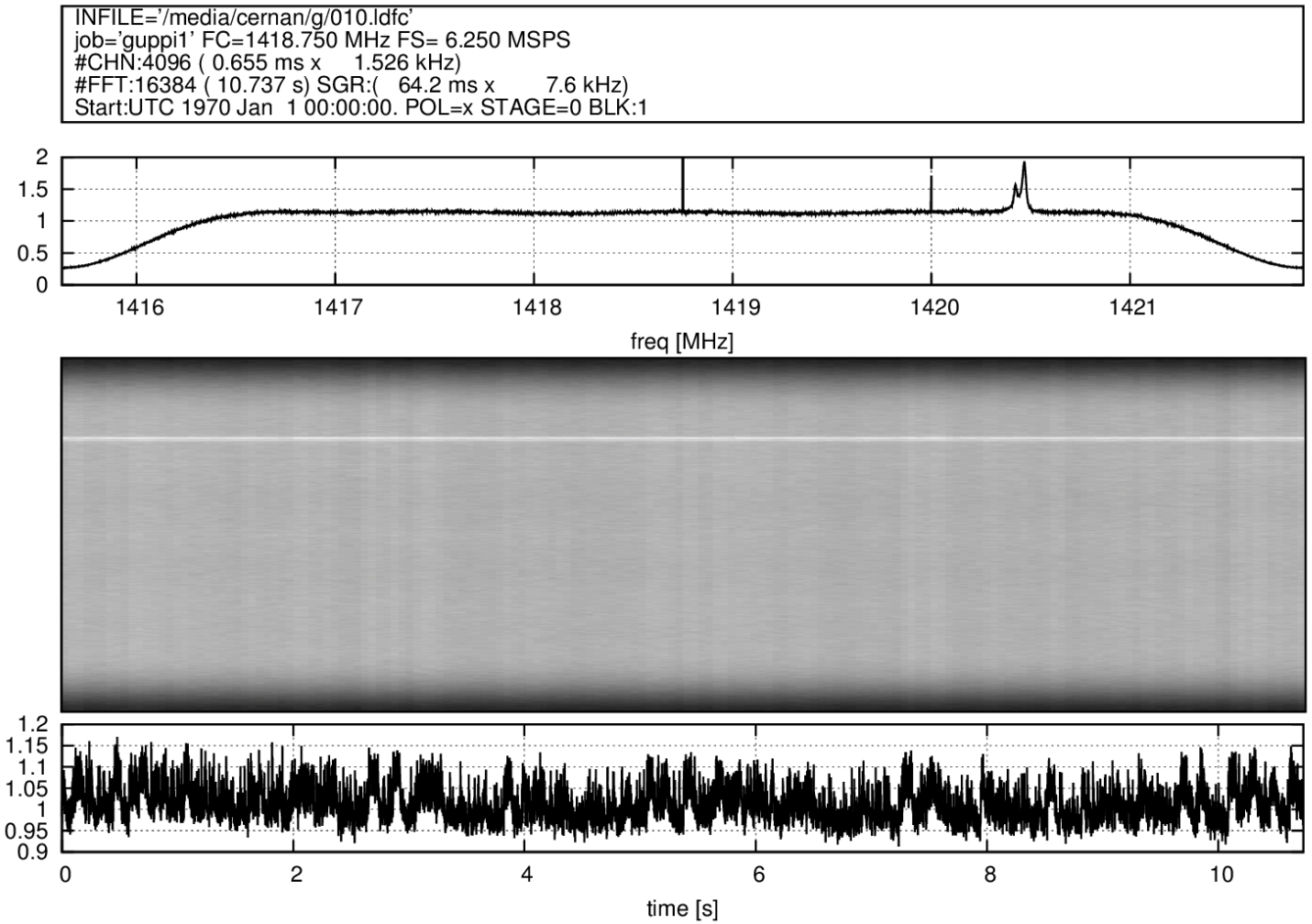

GREEN BANK OBSERVATORY

Approach

- Mitigate impulsive broadband RFI using time-domain blanking in FPGA
  - Robust Recursive Power estimator
  - Strong and weak Bernoulli outlier detectors
  - Low computational complexity appropriate for FPGA implementations
- Mitigation narrowband RFI using frequency-domain blanking in CPU/GPU
  - Perform forward FFT with time and frequency resolution matched to expected (or automatically learned) characteristics of the RFI present
  - Accumulate as necessary to increase INR
  - Identify outliers using Median Absolute Deviation (MAD) on power spectra
  - Flag affected channels in non-accumulated data; IFFT
  - Process cleaned time-domain voltages through real-time pipeline, as before
  - High computational complexity requires CPU / GPU implementation

[Some results shown at end use MAD in time domain also]

GREEN BANK OBSERVATORY

NSF Associated Universities Inc.

Time Domain Blanking

- Uses the instantaneous power from complex voltages (i.e., from a PFB) as detection criterion => 2 mult + 1 Acc => cheap to implement.
- RFI occurrence is decided when the instantaneous power deviates over a threshold for a chosen period of time related to the RFI pulse length.
- Since the instantaneous power of a centered gaussian random distribution follow a chi² distribution, only the estimation of the mean power is needed to fully "know" the distribution => no need for a costly and uncertain subsequent estimation of variance to compute a detection threshold.
- The threshold is solely based on the mean power estimation that is implemented using a recursive low-pass filter.

Time Domain Blanking

- Since detection is quick, we can prevent the mean power estimator from using corrupted samples, leading to a Robust Recursive Power (RRP) estimator
- This only adds very little hardware (a Mux) to the classical recursive mean power estimator compared to other implementations using FPGA-implemented MAD estimators
- The detector can be easily extended (z^{-1} delays replaced by z^{-nb_chan}) to process independent interleaved channels that are naturally present at the outputs of PFBs provided by the CASPER library

RRP Estimator

RFI detection flag from thresholding module

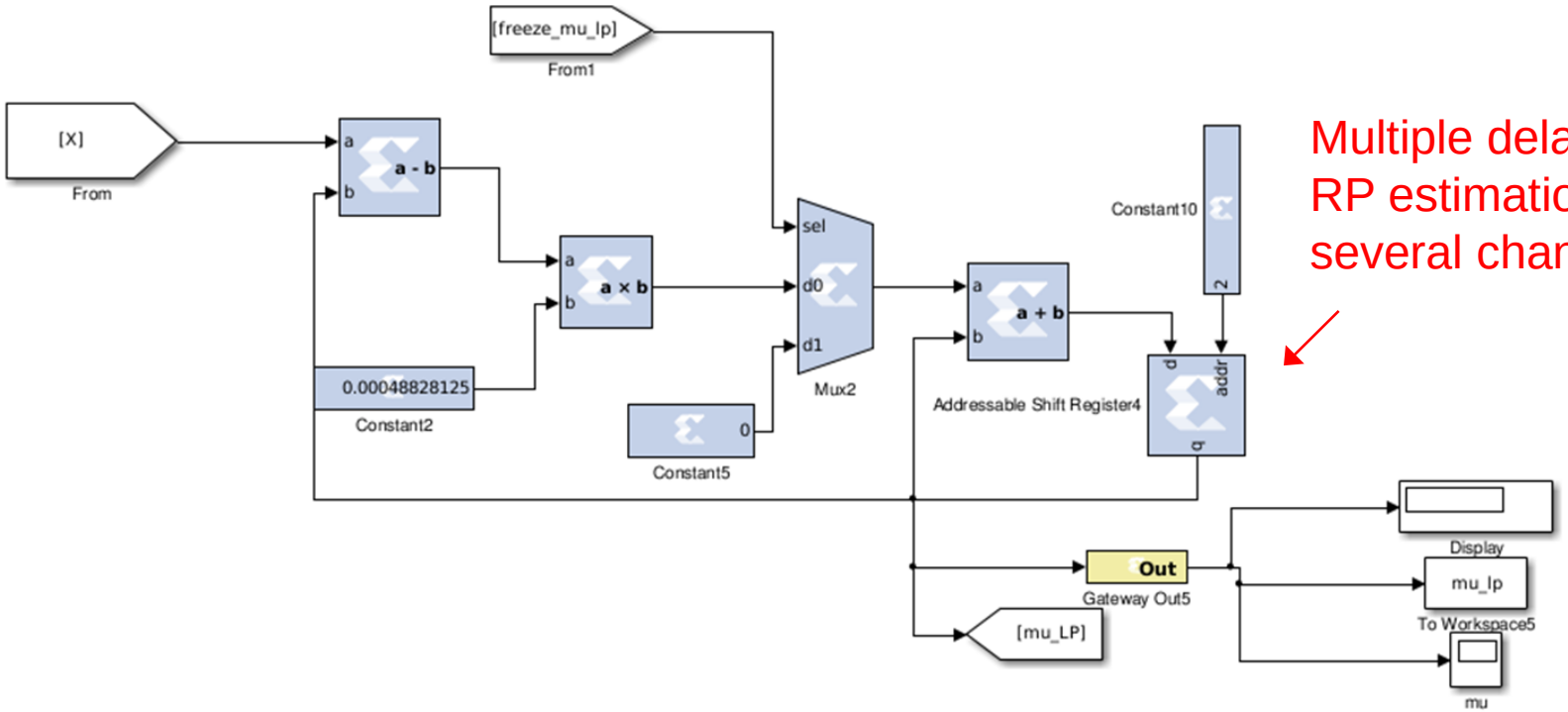

Multiple delays for RP estimation of several channels

Strong and weak pulse detectors

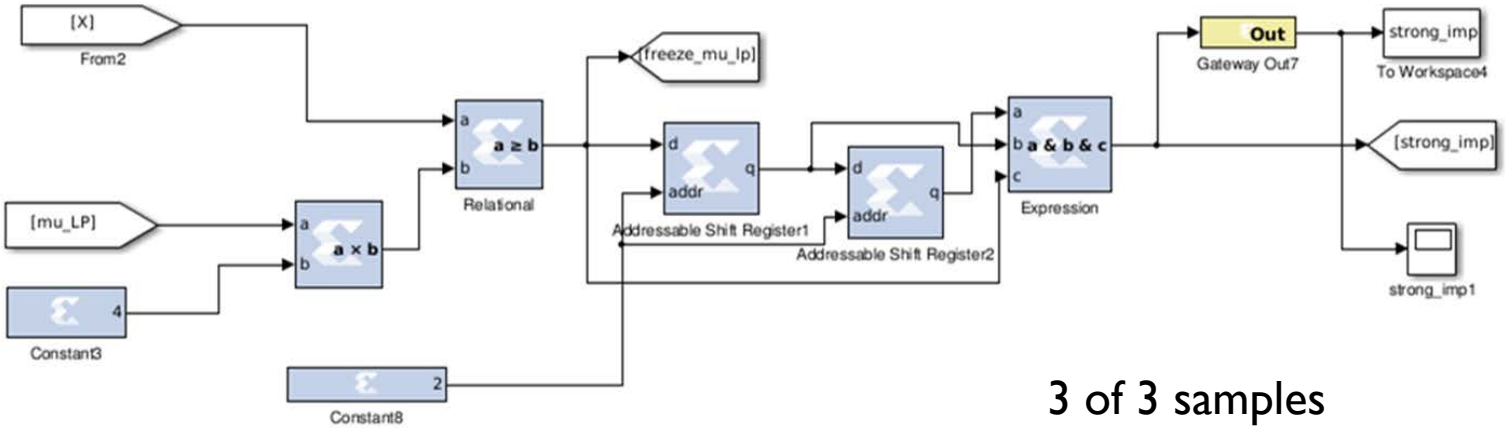

3 of 3 samples
> strong threshold

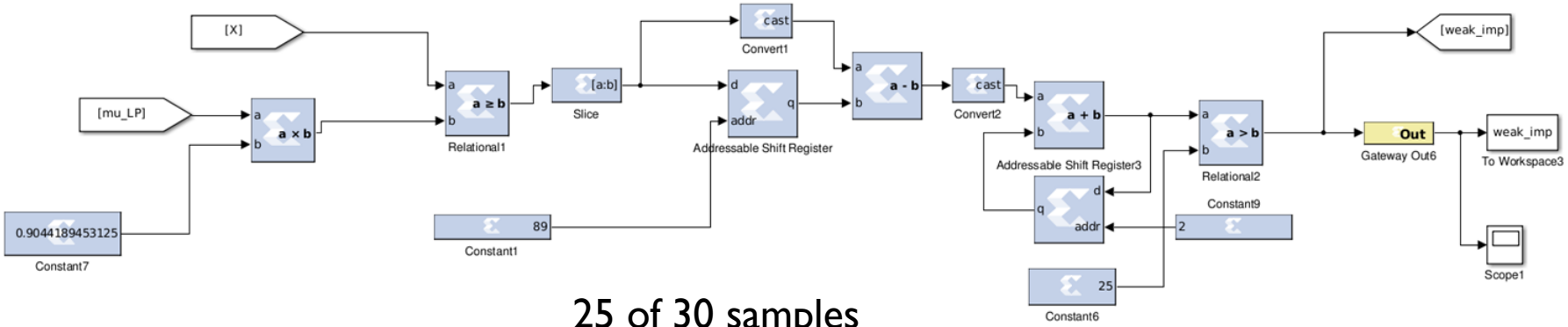

25 of 30 samples
> weak threshold

Data Replacement

- Replace corrupted samples by clean samples previously recorded in a Dual-Port Memory (one port for storing, the other one for fetching)
- Preserve power levels, even with interleaved channels since a correct memory mapping keeps samples separated
- Provides randomness in sample ordering for each channels using LFSR and data itself for address generation
- The latest sample read from memory is replaced as soon as possible by a new clean sample

Data Replacement

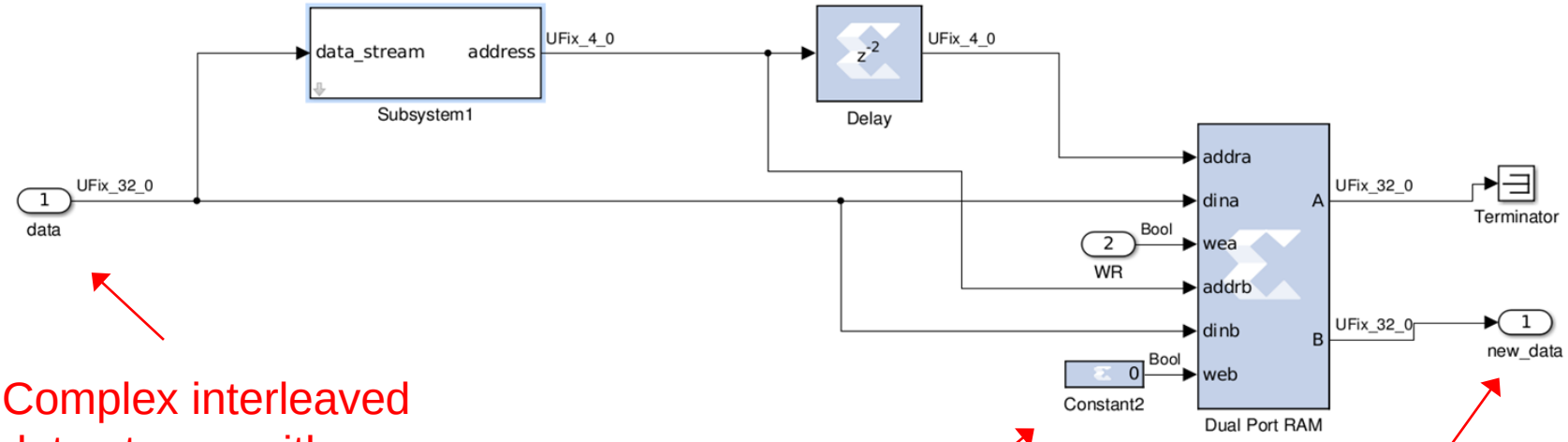

Complex interleaved data stream with corrupted and clean samples

RFI-free flag => OK to store

Complex interleaved data stream with clean samples only

Example – air traffic radar

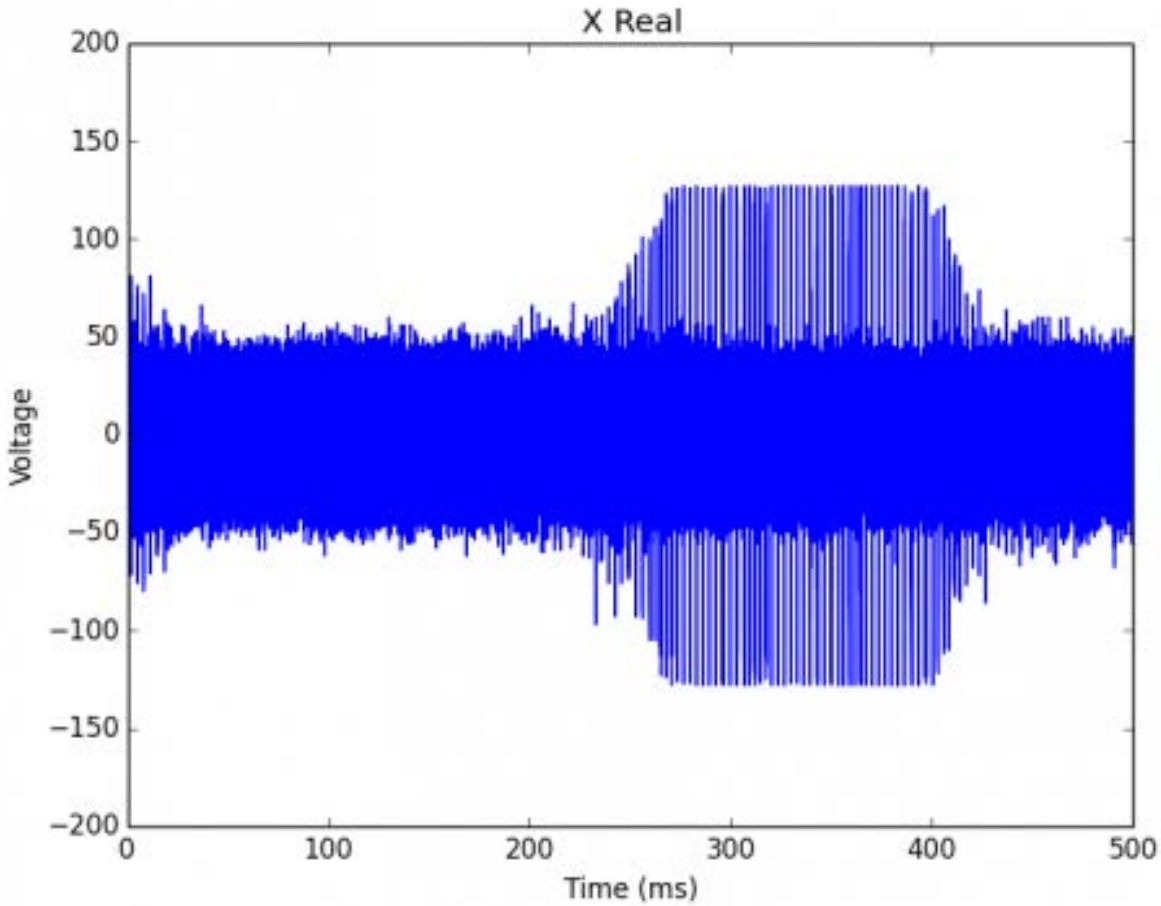

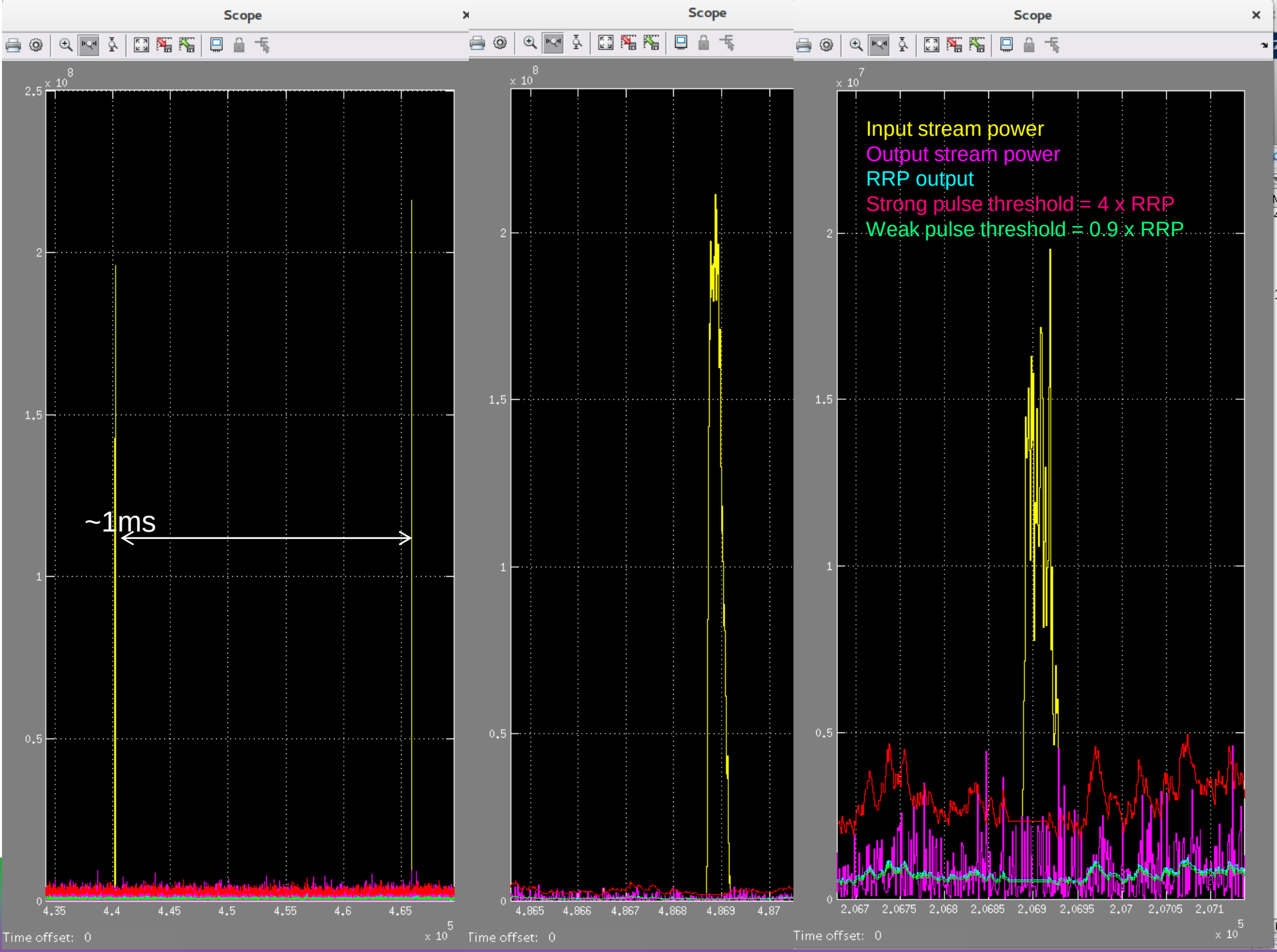
Scope
Scope
Scope
~1ms
Input stream power
Output stream power
RRP output
Strong pulse threshold = 4 x RRP
Weak pulse threshold = 0.9 x RRP
Time offset: 0
Time offset: 0
Time offset: 0

Frequency Domain Mitigation

- FFT a series of N x M time samples
- – Append complex frequencies to N x M AppendBuffer
- – Accumulate N power spectra to single M-point IntegrationBuffer
- Apply MAD algorithm to IntegrationBuffer
- Replace complex values at corresponding frequencies in AppendBuffer
- Inverse FFT and proceed with original processing

GREEN BANK OBSERVATORY

NSF Associated Universities Inc.

Frequency Domain Mitigation

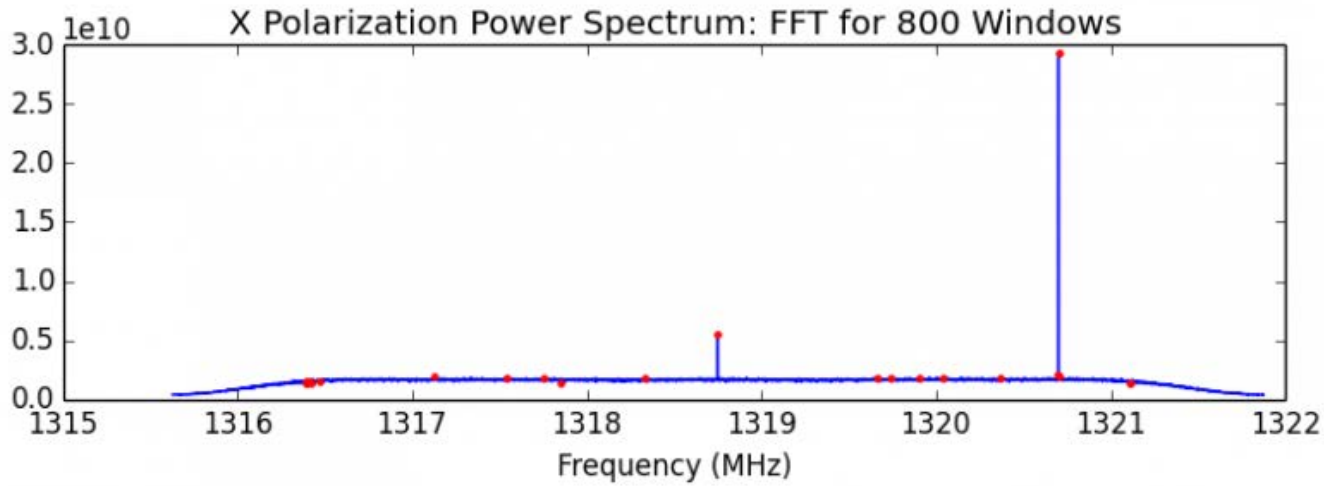

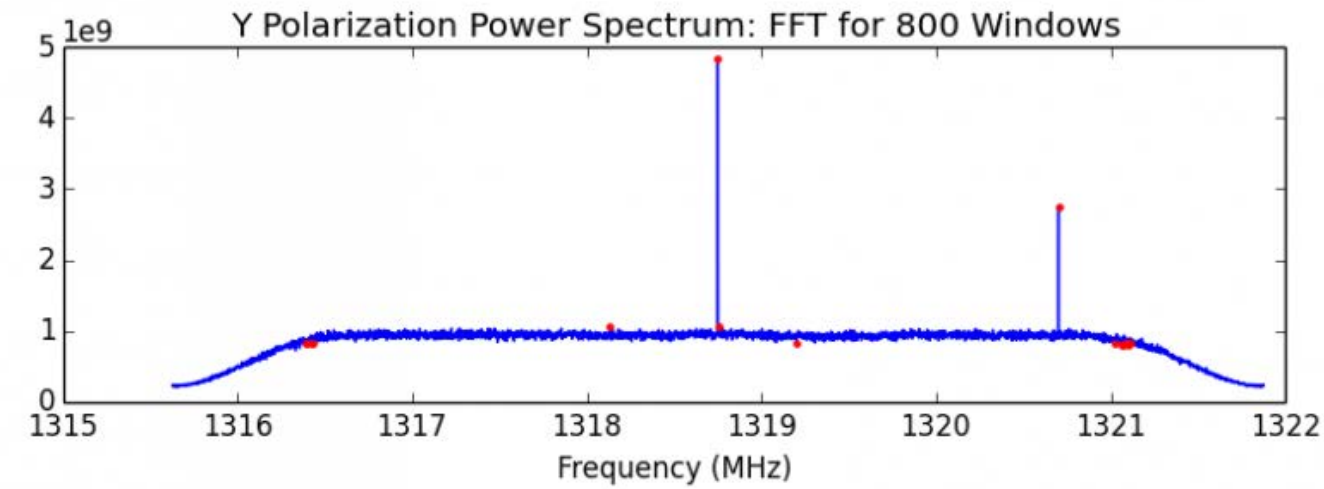

GREEN BANK OBSERVATORY

Frequency Domain Mitigation

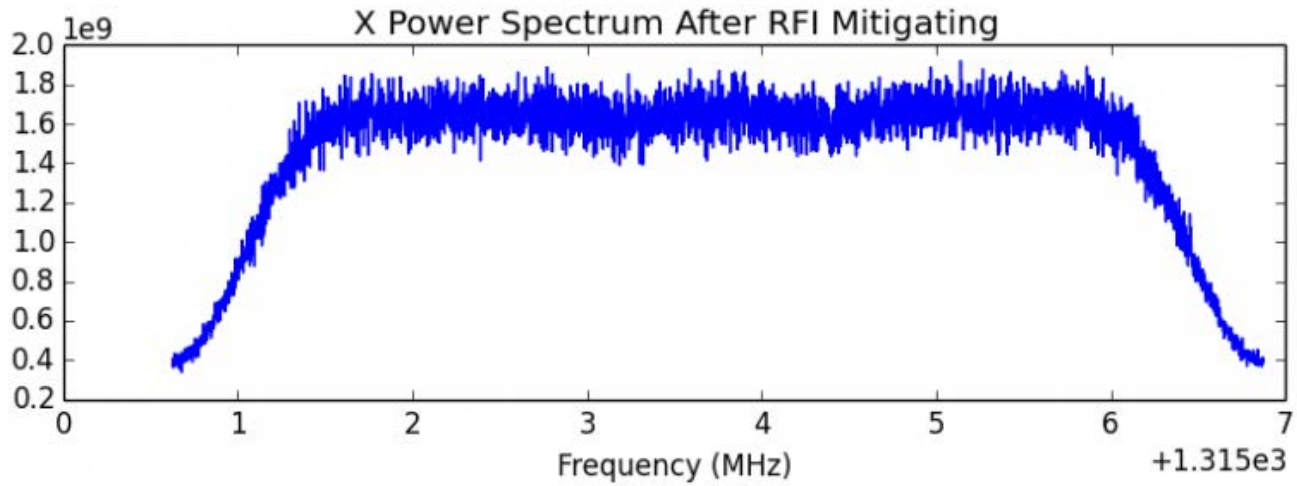

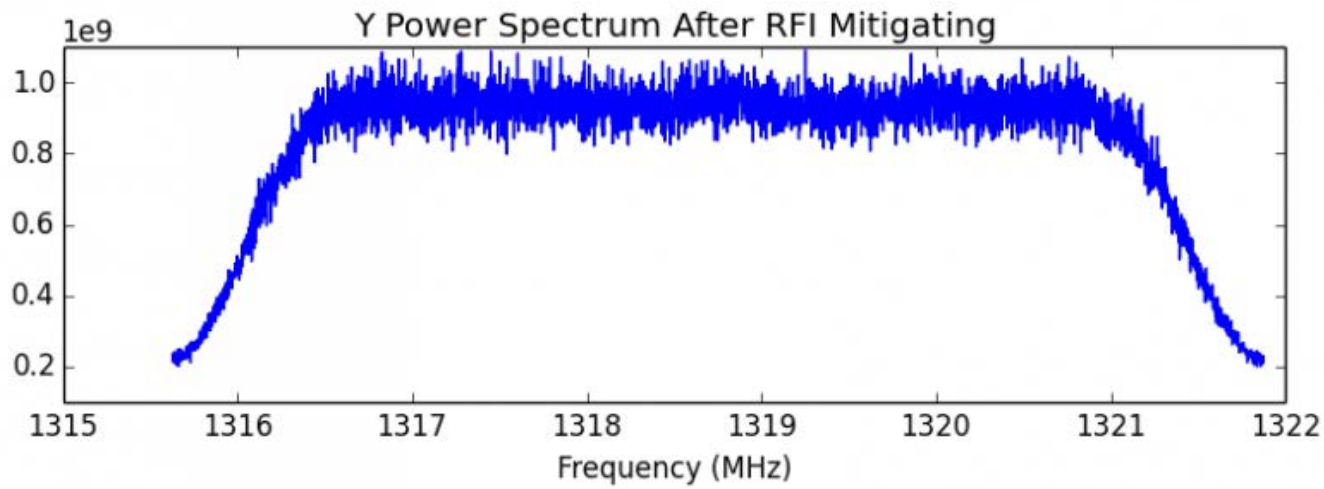

GREEN BANK OBSERVATORY

Pulsar TOA Residual Results

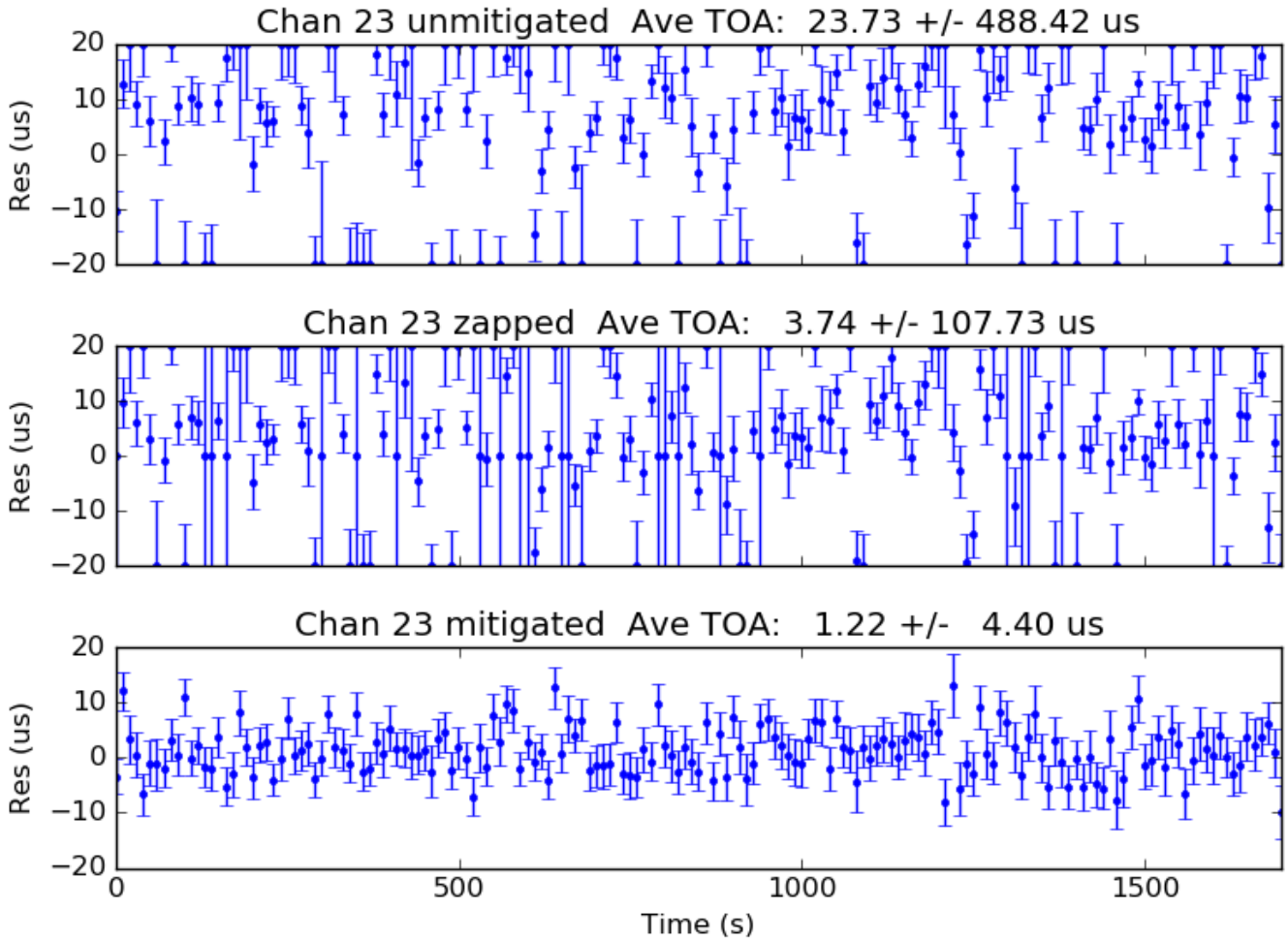

GREEN BANK OBSERVATORY

Pulsar TOA residual results

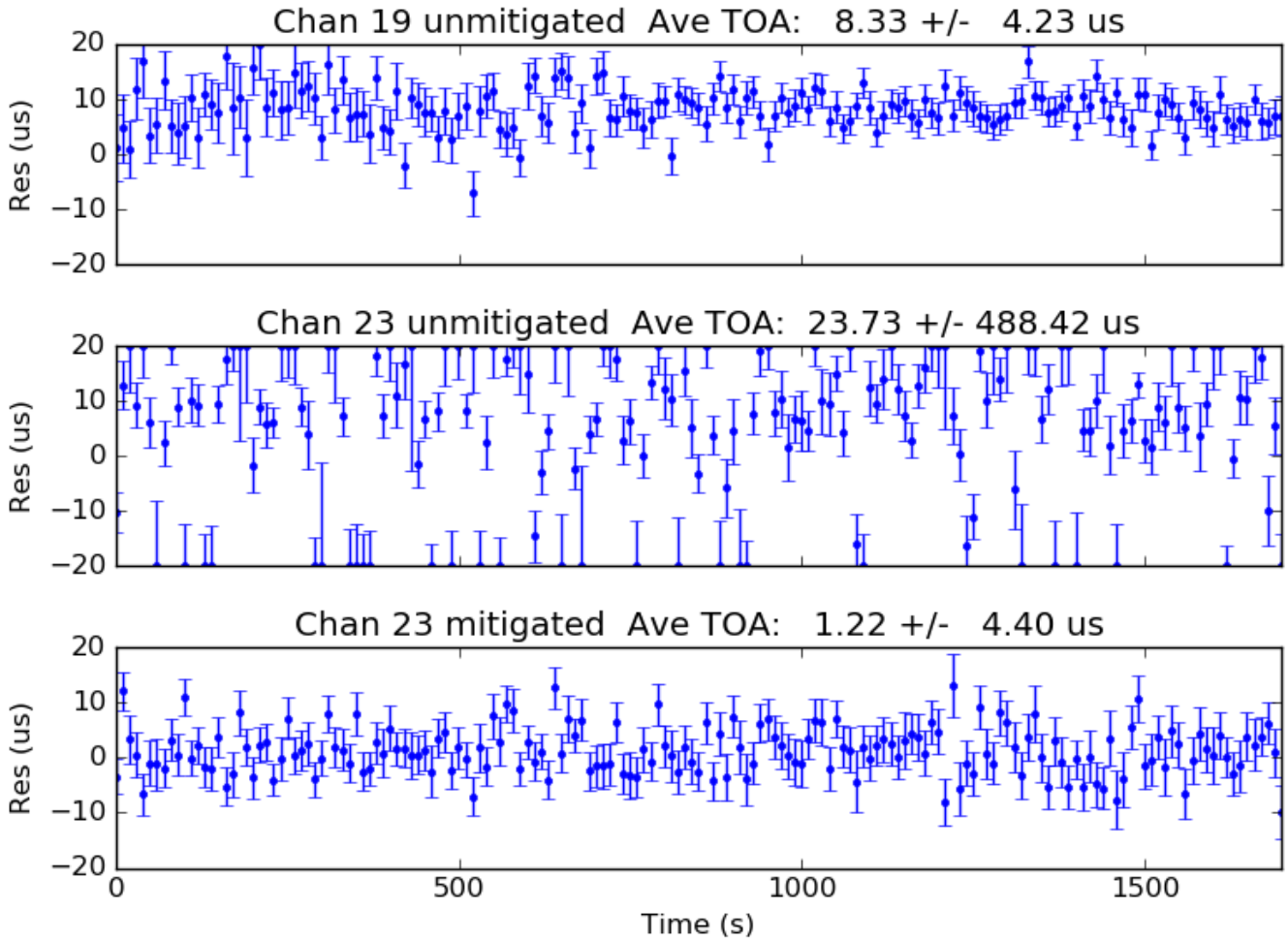

GREEN BANK OBSERVATORY

Hybrid Task Graph Scheduler (HTGS)

- Time-domain RFI mitigation (and the reminder of the CPU / GPU DSP pipeline) is complex
  - We wish to precisely define and document the algorithms and processing stages
  - Significant interaction / overlap between I/O and computation, memory management and task scheduling
  - Wish to optimize the design to maximize throughput and hardware utilization
- HTGS approach provides considerable assistance:
  - graph representation from the model and framework is explicit
  - provide a separation of concerns between computation, state maintenance, memory, and scalability
  - allows rapid prototyping and experimentation for performance

GREEN BANK OBSERVATORY

NSF Associated Universities Inc.

Hybrid Task Graph Scheduler (HTGS)

- Development to date:
  - Prototyped initial data access tasks and computational stages in Python.
  - Ported to naïve C++ implementation
  - Developed initial HTGS task graph design
  - Create a htgs::ITask for each computational entity
  - htgs::IData is used to represent data required by each htgs::Itask
  - Fill out HTGS design using initial C++ code

- HTGS version provided 26x speed improvement compared to initial vanilla C++
  - 4 cores, 2 threads
  - 8 Thread implementation

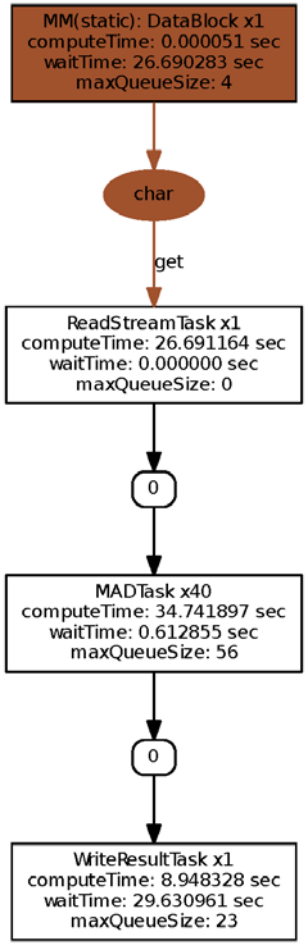

GREEN BANK OBSERVATORY

Summary

- We have defined an end-to-end real-time RFI mitigation approach for single-dish spectrometer / pulsar backends, utilizing both time and frequency-domain mitigation
- Initial offline prototypes have been developed utilizing Python and Simulink, and tested using archival GUPPI raw voltage data
- Results are / will be evaluated utilizing rigorous astrophysical metrics (pulsar TOA analysis underway; redshifted HI spectrum analysis soon)

GREEN BANK OBSERVATORY

Next Steps

- Complete and test Roach-II time-domain blanking implementation, including configuration and control options
- Complete and test HTGS frequency-domain blanking implementation, including partitioning between CPU / GPU
- Commission using multiple VEGAS Banks, receiving identical copies of the same IF signal, one utilizing blanking, one without

GREEN BANK OBSERVATORY

NSF Associated Universities Inc.

GREEN BANK
OBSERVATORY

greenbankobservatory.org

The Green Bank Observatory is a facility of the National Science Foundation operated under cooperative agreement by Associated Universities, Inc.